CAT6A STP RJ45 CONNECTOR
TOOLLESS - ANGLED

Art.nr. 400-007

Short Description

Shielded RJ45 connector for terminating CAT6A network cables. Designed for high data transmission speeds up to 10 Gbps and 500 MHz, providing optimal protection against electromagnetic interference. Suitable for professional installations in demanding network and industrial environments.

ELECTRICAL:

Voltage rating: 125 vac rms
Current rating:1 .5amp
Contact resistance: 100 milliohms max
Insulation resistance: 1000 megohms min @500 vdc
Dielectric strength: 750 vac rms 60hz, 1min

ENVIRONMENTAL:

Storage: -40°to +85°
Operation: 0°to 70°

MECHANICAL:

Housing material:zinc alloy
Idc material: pc
Pcb material: fr-4 t=1.6mm
contact material: phosphor bronze stamp pin 0.30mm
Idc life: 200 times min
Wire: awg 23-26

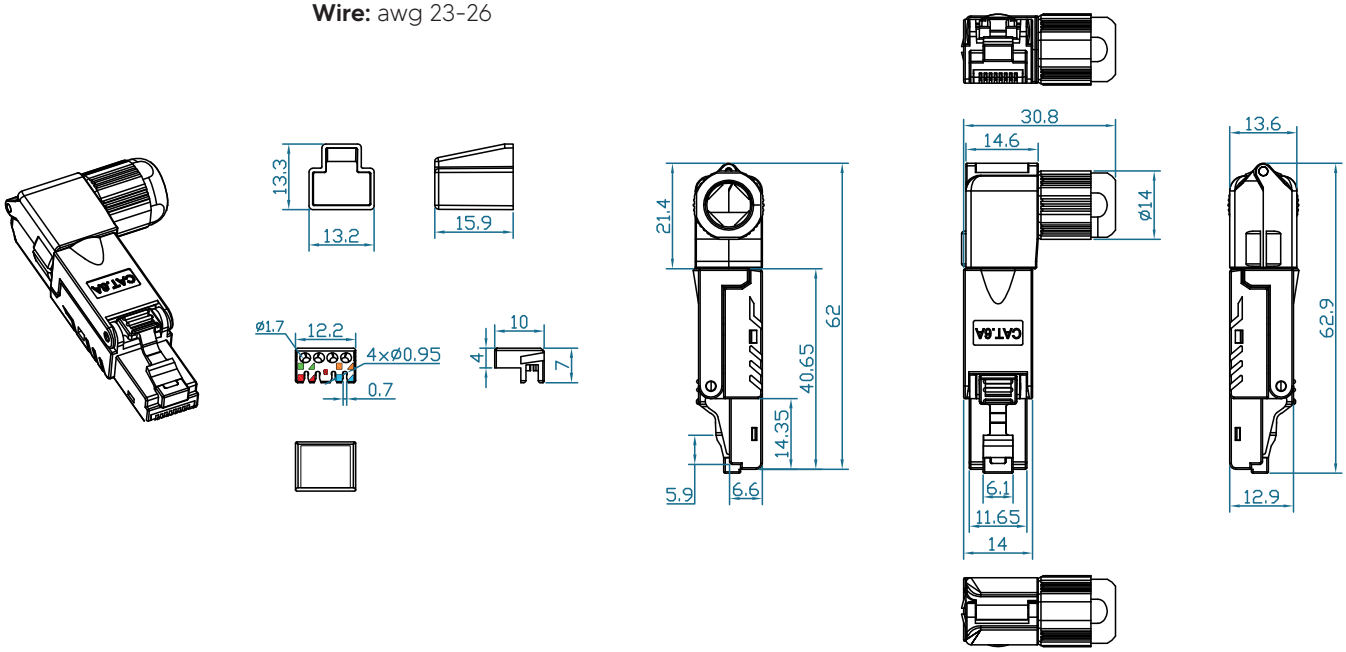

Connecting with quality!